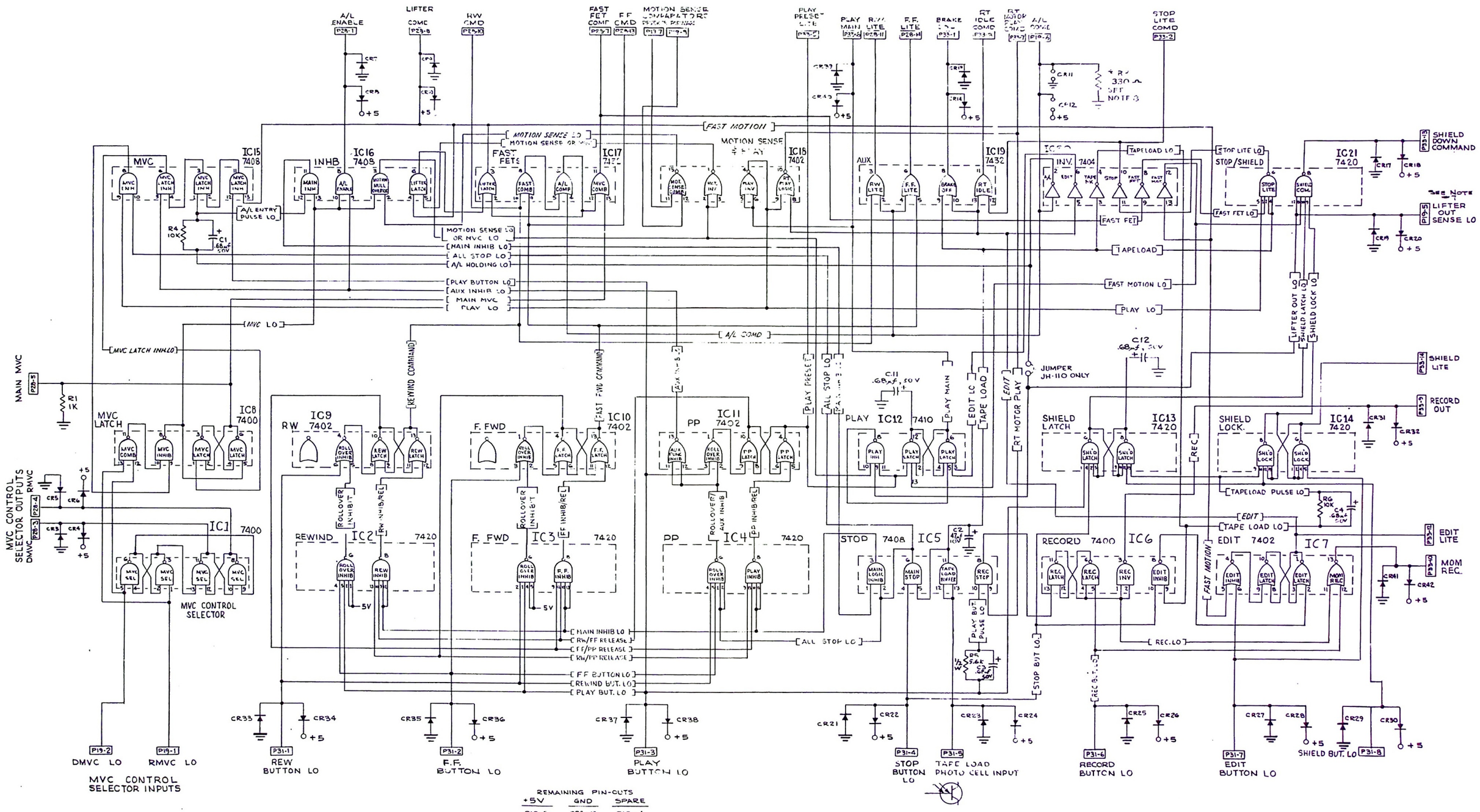

NOTES:

1.) ALL DIODES ARE 1N4004.

2.) ALL RESISTORS ARE ½ W, 5% TOL.

3.) ALL CAPACITORS ARE IN MICROFARADS/VOLTS.

4.) ALL IC'S RECEIVE +5V AT PIN 14 & GND AT PIN 7

5.) USE DECOUPLING CAPS (.01µf) AS NOTED ON ASSY DWG. (C5-C10) THEY ARE NOT SHOWN HERE.

6. ALL FUNCTION CALLOUTS ARE ACTIVE HI UNLESS "LO" IS DESIGNATED.

7. JH-110 USES LOCATE COMMAND FROM RTZ BOARD FOR LIFTER OUT SENSE

8. REMOVE R24 & JUMPER PINS 10 & 11, ALL [illegible] LOCK IS NOT USED.

Control Logic Board
SC2500D0027-00 rev N

JH-24

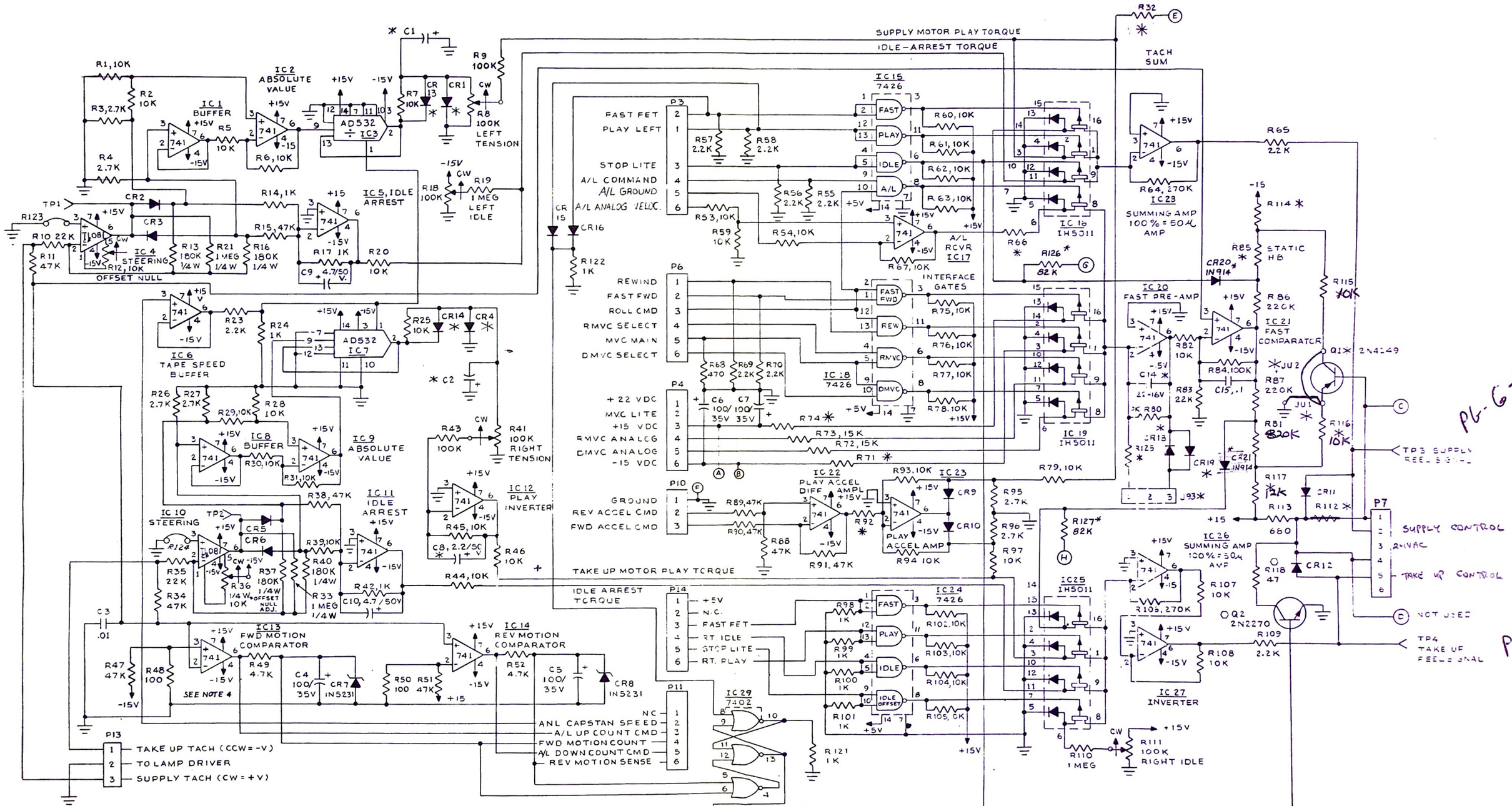

NOTES:
1. UNLESS OTHERWISE INDICATED:
   A. ALL RESISTANCE VALUES ARE IN OHMS, ±5%, 1/2 WATT.
   B. ALL CAPACITANCE VALUES ARE IN MICRO FARADS.
   C. ALL DIODES ARE IN4004.
   D. ALL WIRES ARE AWG. #22 STRANDED
2. * SEE SHEET 2 OF 2 DASH ● TABLE OF OPTIONAL/VARIABLE COMPONENTS.
3. ○ DELETE FOR -31, JH110LB. ONLY.
4. IC13 PIN 5, A/L GND. PIN 6 A/L VELOCITY.

Analog Torque Board
SC2600D0001 rev AZ

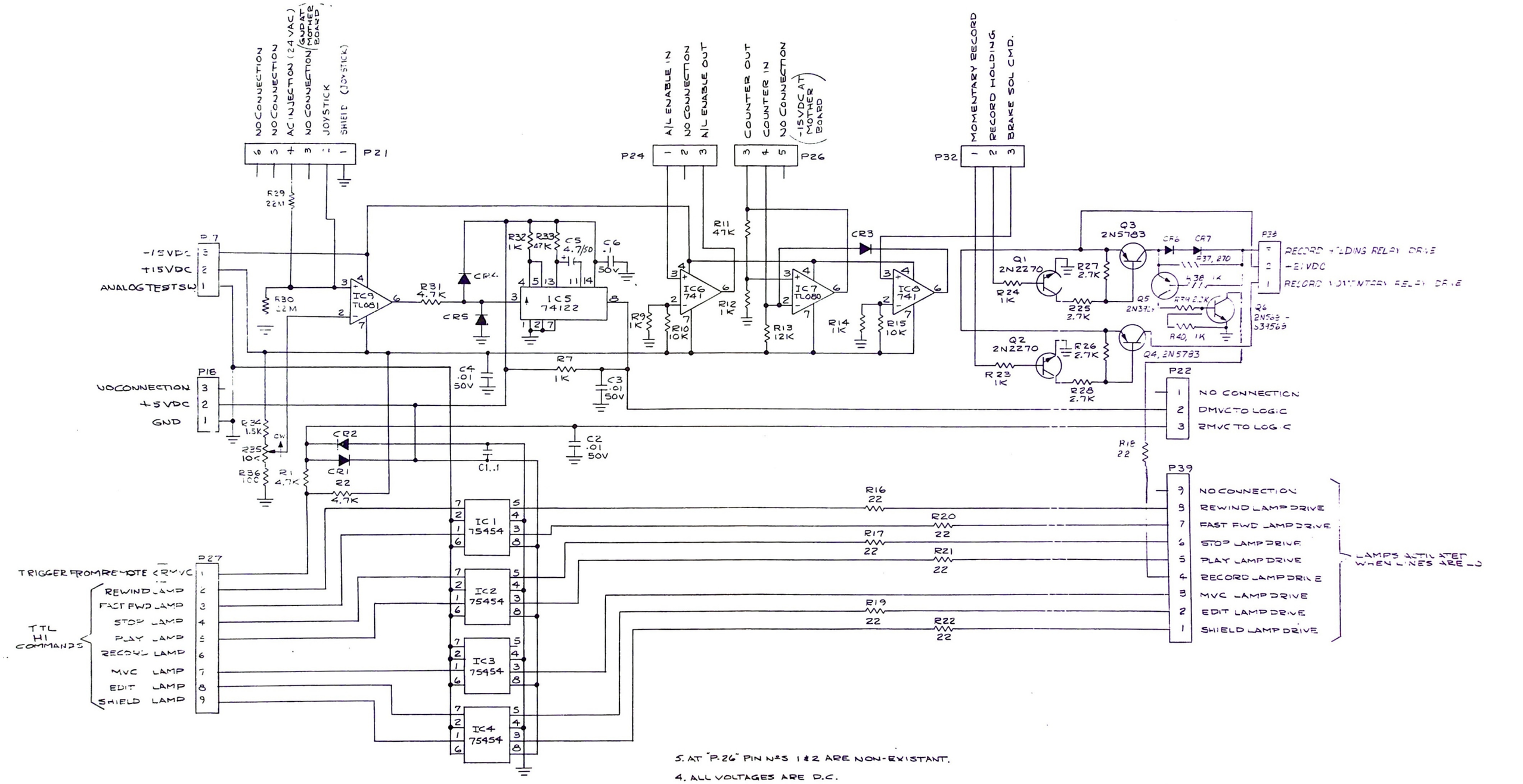

5. AT "P-26" PIN Nos 1 & 2 ARE NON-EXISTANT.
4. ALL VOLTAGES ARE D.C.
3. ALL DIODES ARE 1N4004.
2. ALL RESISTORS ARE IN OHMS, ±5%, ½W.
1. ALL CAPACITORS ARE IN MICROFARADS.
NOTES: UNLESS OTHERWISE SPECIFIED.

Interface/Lamp Driver Board
SC2500D0416 rev C

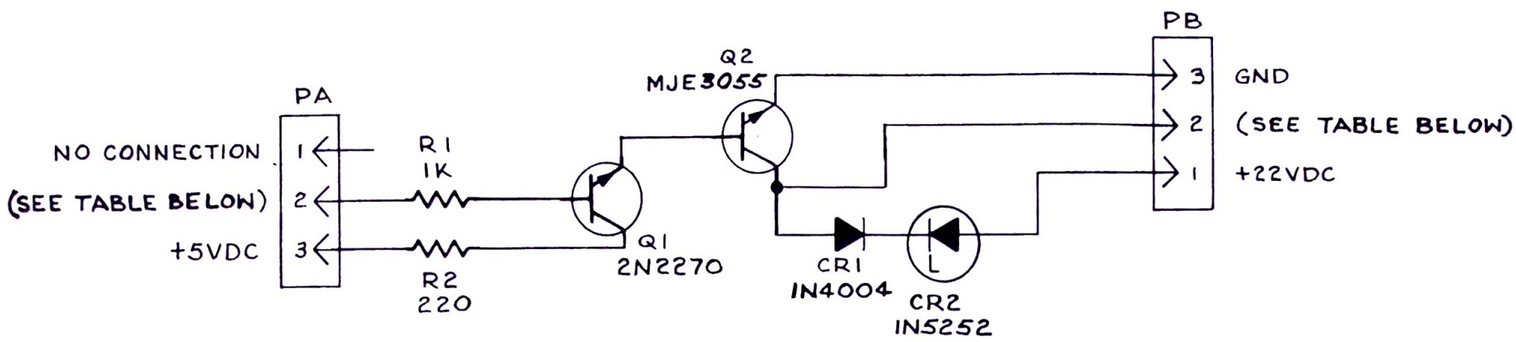

DRIVER BD	PA	PA-2 FUNCTION	PB	PB-2 FUNCTION
BRAKE SOL.	P41	BRAKE LOGIC COMM.	P37	BRAKE SOL. DRIVE
PLAY SOL.	P35	PLAY LOGIC COMMAND	P34	PLAY SOL. DRIVE
"Z" ROLLER SOL.	P30	"Z" ROLLER LOGIC COMM	P29	"Z" ROLLER SOL. DRIVE
LIFTER SOL.	P25	LIFTER LOGIC COMM.	P23	LIFTER SOL. DRIVE
SHIELD SOL.	P20	SHIELD LOGIC COMM.	P16	SHIELD SOL. DRIVE

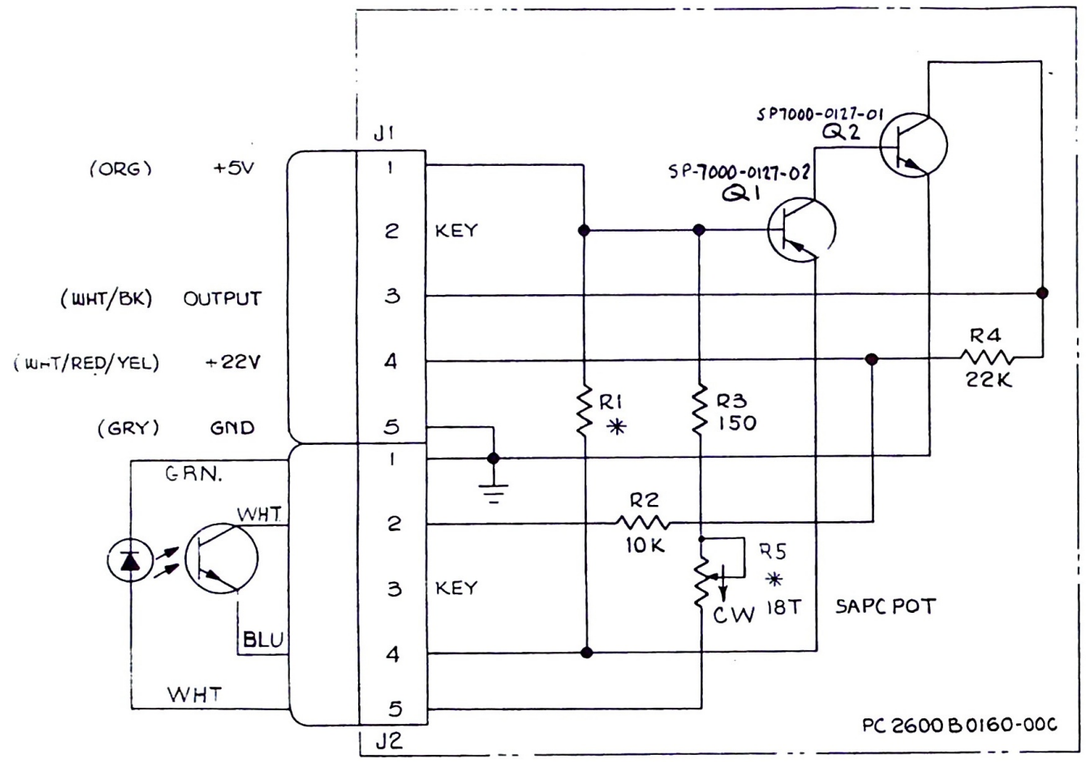

*	-00	-10
R1	6800	1000
R5	2000	5000

NOTE:

1. ALL RESISTOR VALUES ARE IN OHMS, 1/4 W, 5%.
2. -10 FOR JH-24 TAPE MACHINE ONLY

Photo Sensor Board
SC2600B0160 rev H

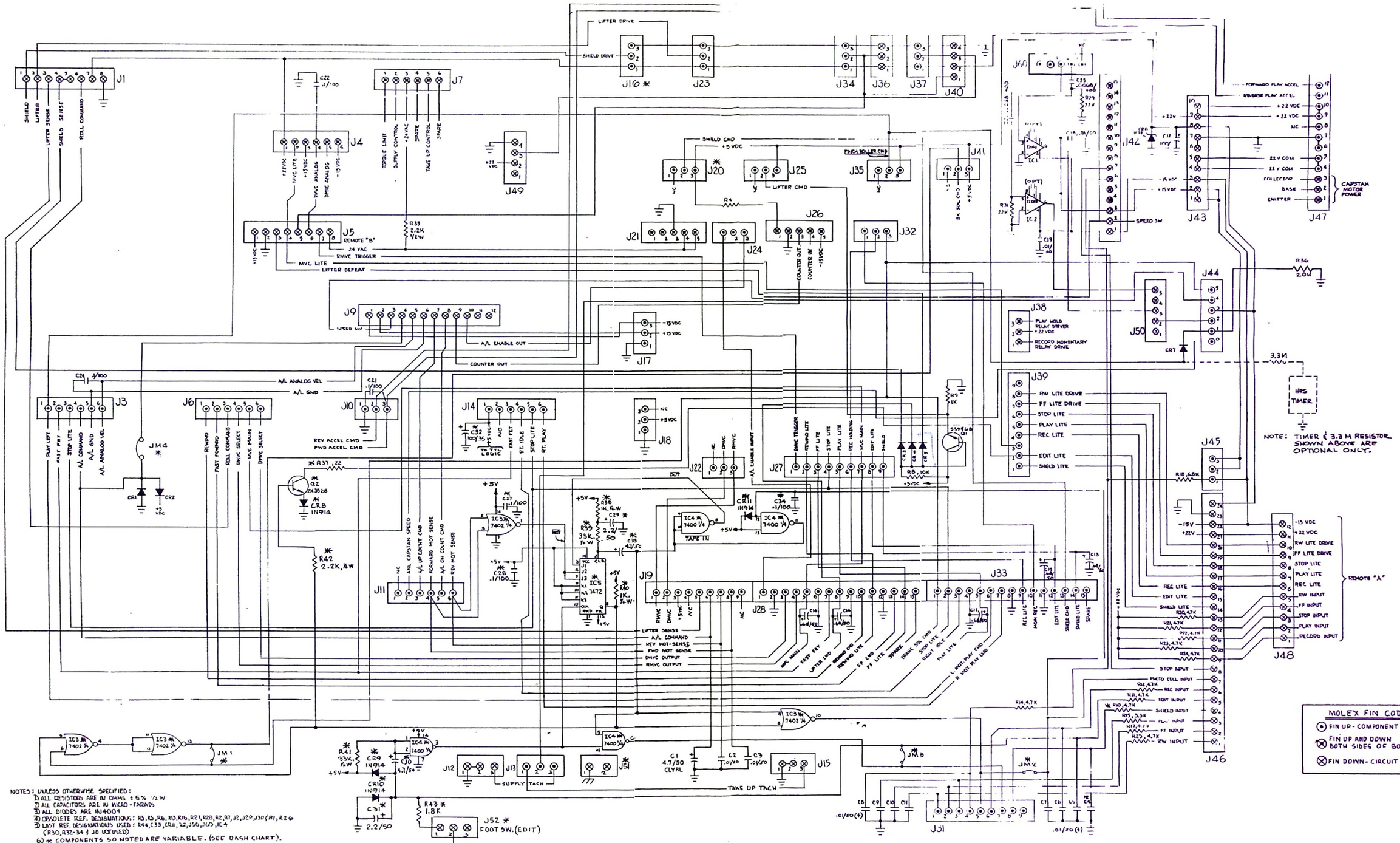

NOTES: UNLESS OTHERWISE SPECIFIED:

1) ALL RESISTORS ARE IN OHMS ± 5% 1/2 W
2) ALL CAPACITORS ARE IN MICRO-FARADS
3) ALL DIODES ARE IN4004
4) OBSOLETE REF. DESIGNATIONS: R3, R5, R6, R13, R16, R27, R28, R2, R7, J2, J29, J30 & R1, R26
5) LAST REF. DESIGNATIONS USED: R44, C33, CR11, Q2, J50, J60, IC4
(R30, R32-34 & J8 NOT USED)
6) * COMPONENTS SO NOTED ARE VARIABLE. (SEE DASH CHART).

MOLEX PIN CODE

⊙ PIN UP - COMPONENT SIDE ONLY

⊗ PIN UP AND DOWN BOTH SIDES OF BOARD

⊗ PIN DOWN - CIRCUIT SIDE ONLY

DASH NO.	MODEL	VARIABLE COMPONENTS																																				
		C4	C27	C28	C29	C30	C31	C32	C33	C34	CR8	CR9	CR10	CR11	JM4	IC3	IC4	[illegible]	[illegible]	J20	J51	JM1	JM2	JM3		G2	R4	R10		R37	R38	R39	R40	R41	R42	R43	R44	IC5
-00	JH-24	IN	—	—	—	—	—	—	—	—	—	—	—	—	JUMPER	—	--		IN	IN	—	IN	IN	IN	—	—	100	IN	—	—	—	--	—	—	—	—	—	—
-01	JH-110B	-	IN	IN	IN	IN	IN	IN	IN	IN	IN	IN	IN	IN	JUMPER	IN	IN	IN	—	-	IN	—	—	--	—	IN	270	—	—	IN	IN	IN	IN	IN	IN	IN	IN	IN

DASH NO. CHART

Transport Mother Board
SC2500E0085 rev AE

JH-24

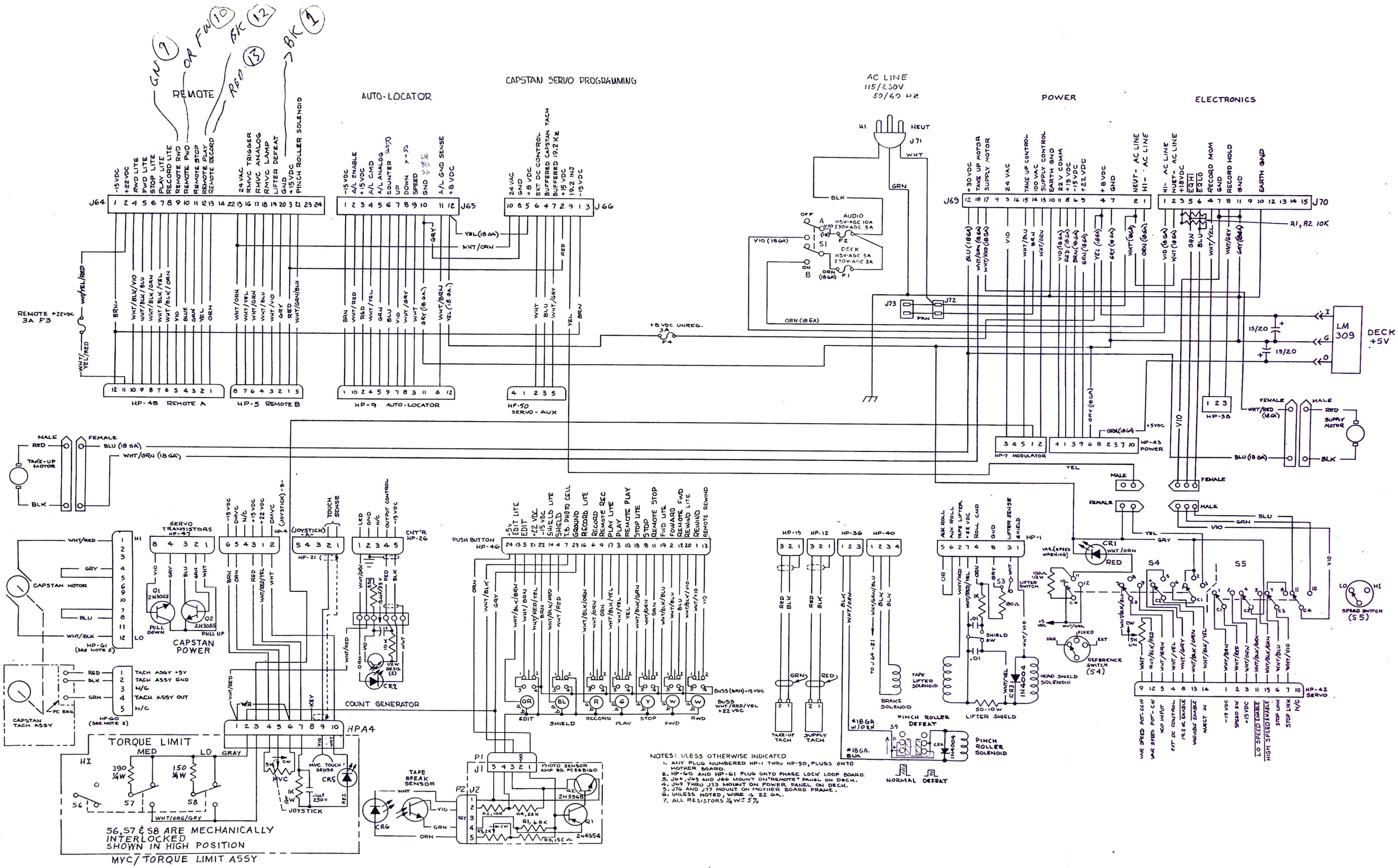

Interconnect Harness
SC9000D0163 rev C

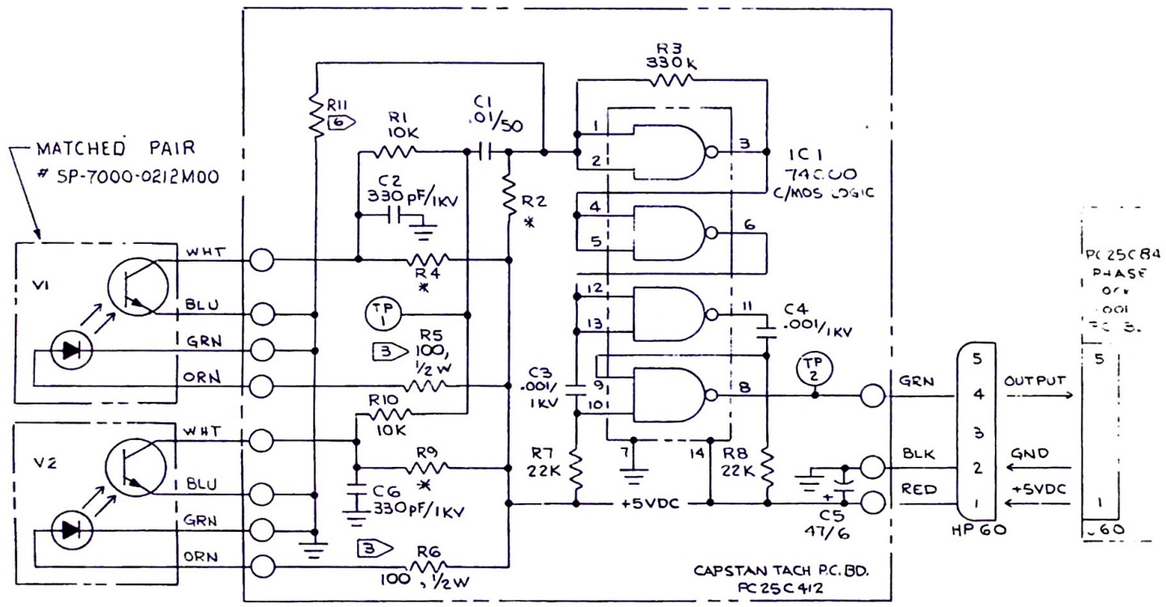

NOTES:

1) UNLESS OTHERWISE SPECIFIED:
ALL RESISTOR VALUES ARE IN OHMS 1/4W. 5%.
ALL CAPACITOR VALUES ARE IN MICROFARADS/VOLTS.

2) TP1 & TP2 ARE SWAGED TERM POSTS.

3) R5 & R6 ARE NOMINAL VALUES, MAY CHANGE AT FINAL CHECKOUT.

4) USE LEADS AS SUPPLIED WITH V1 & V2.

5) WIRES TO HP60 ARE 22 AWG, 7 STRAND

6) VALUE SELECTED AT FINAL CHECKOUT

7) * R4, R9 & R2 SELECTIVE TEST COMPONENTS

Capstan Tach Board
SC2500B0412-00 rev E

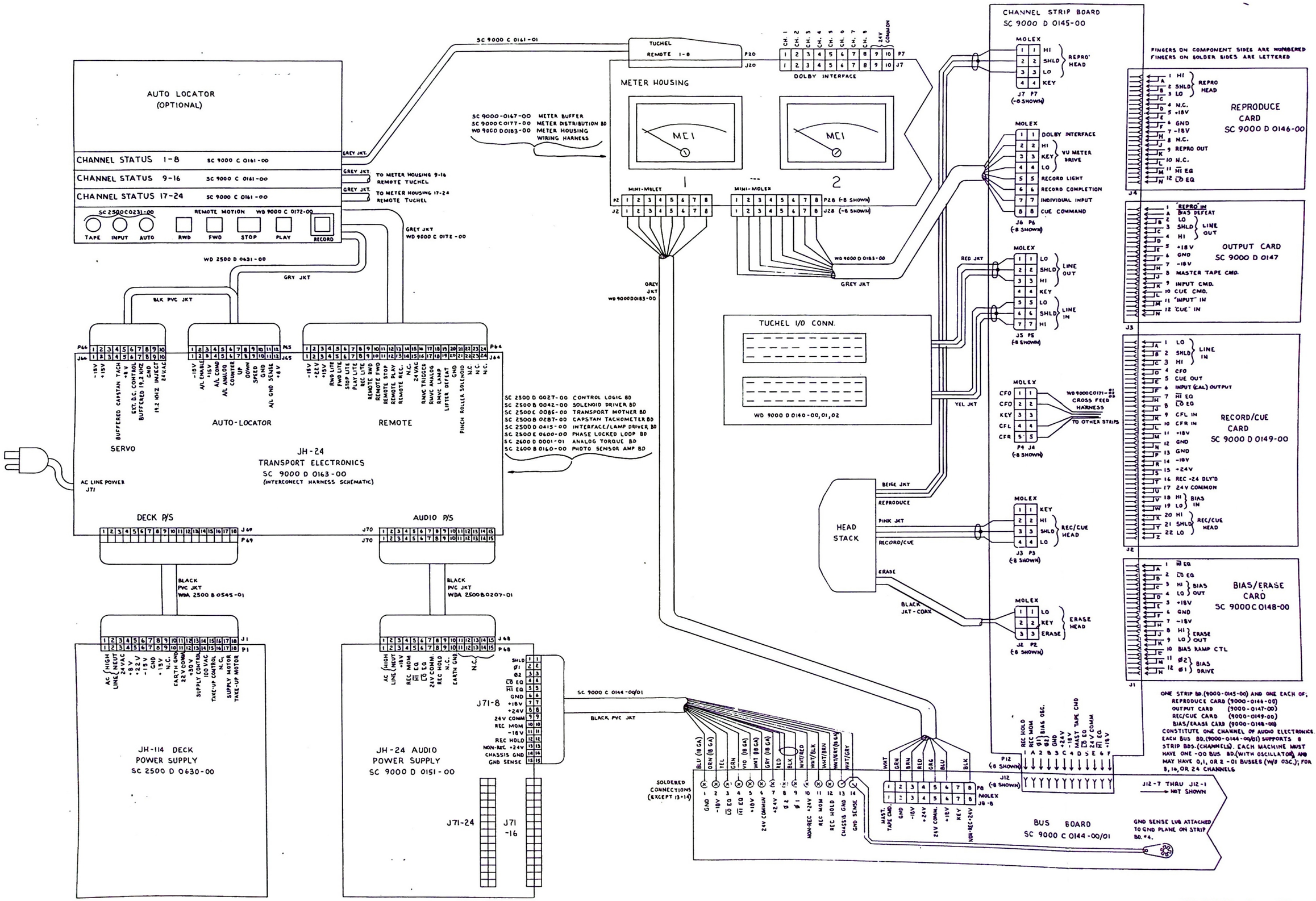

JH-24 System Drawing
WD9000E0184

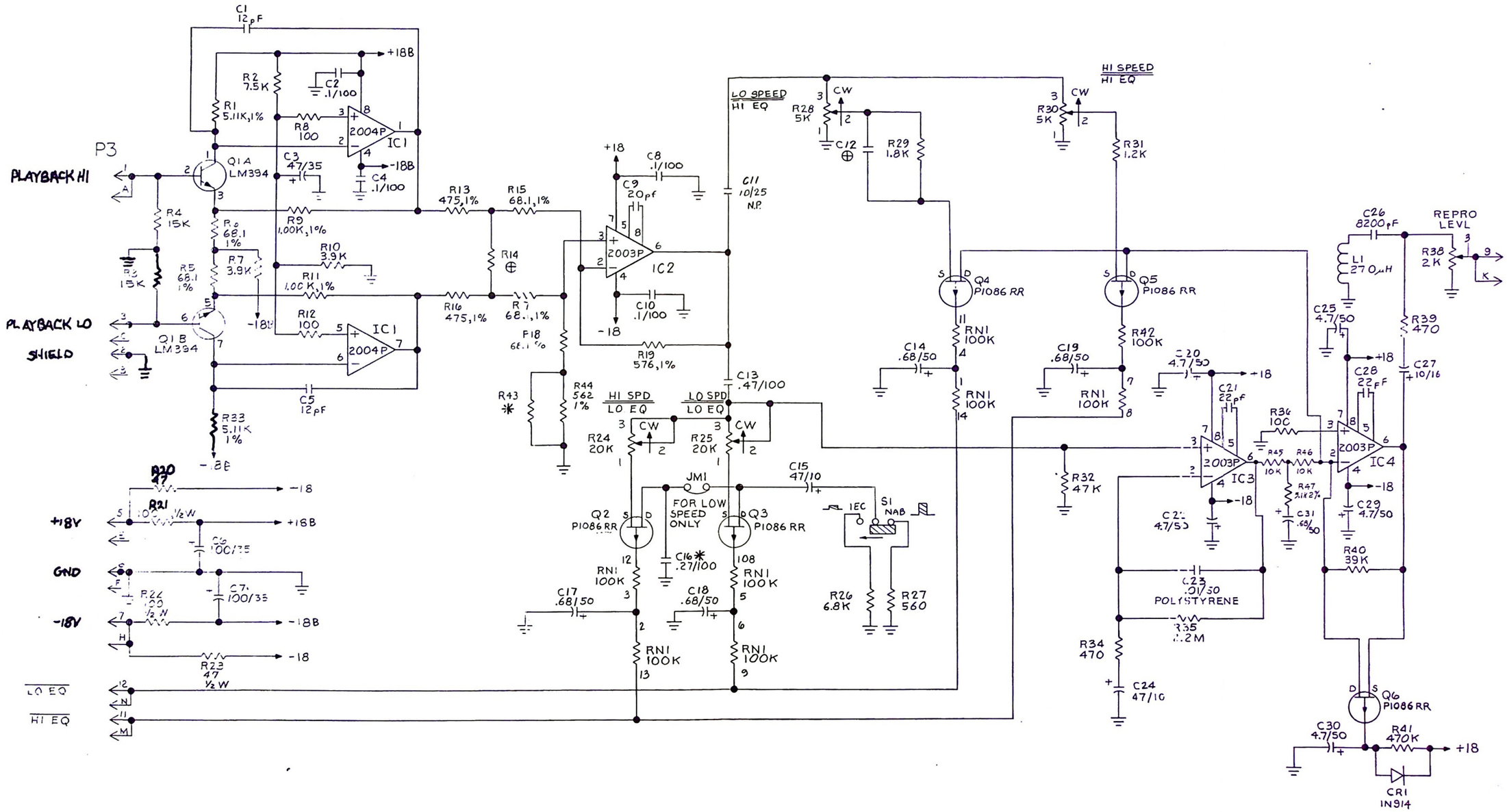

NOTES:

1. UNLESS OTHERWISE SPECIFIED:
   ALL RESISTOR VALUES ARE IN OHMS, ¼W ± 5% EXCEPT, 1% RESISTORS WHICH ARE ⅛W.
   ALL CAPACITOR VALUES ARE IN MICROFARADS/VOLTS.
2. ⊕ DENOTES OPTIONAL COMPONENTS NOT NORMALLY REQUIRED
3. NUMBERS AND → CORRESPOND TO GOLD FINGERS ON COMPONENT SIDE OF PC. BD.
   LETTERS AND → CORRESPOND TO GOLD FINGERS ON SOLDER SIDE OF PC. BD.
4. * DENOTES VARIABLE COMPONENT (SEE CHART)

Reproduce Board
SC9000D0146 rev J

JH-24

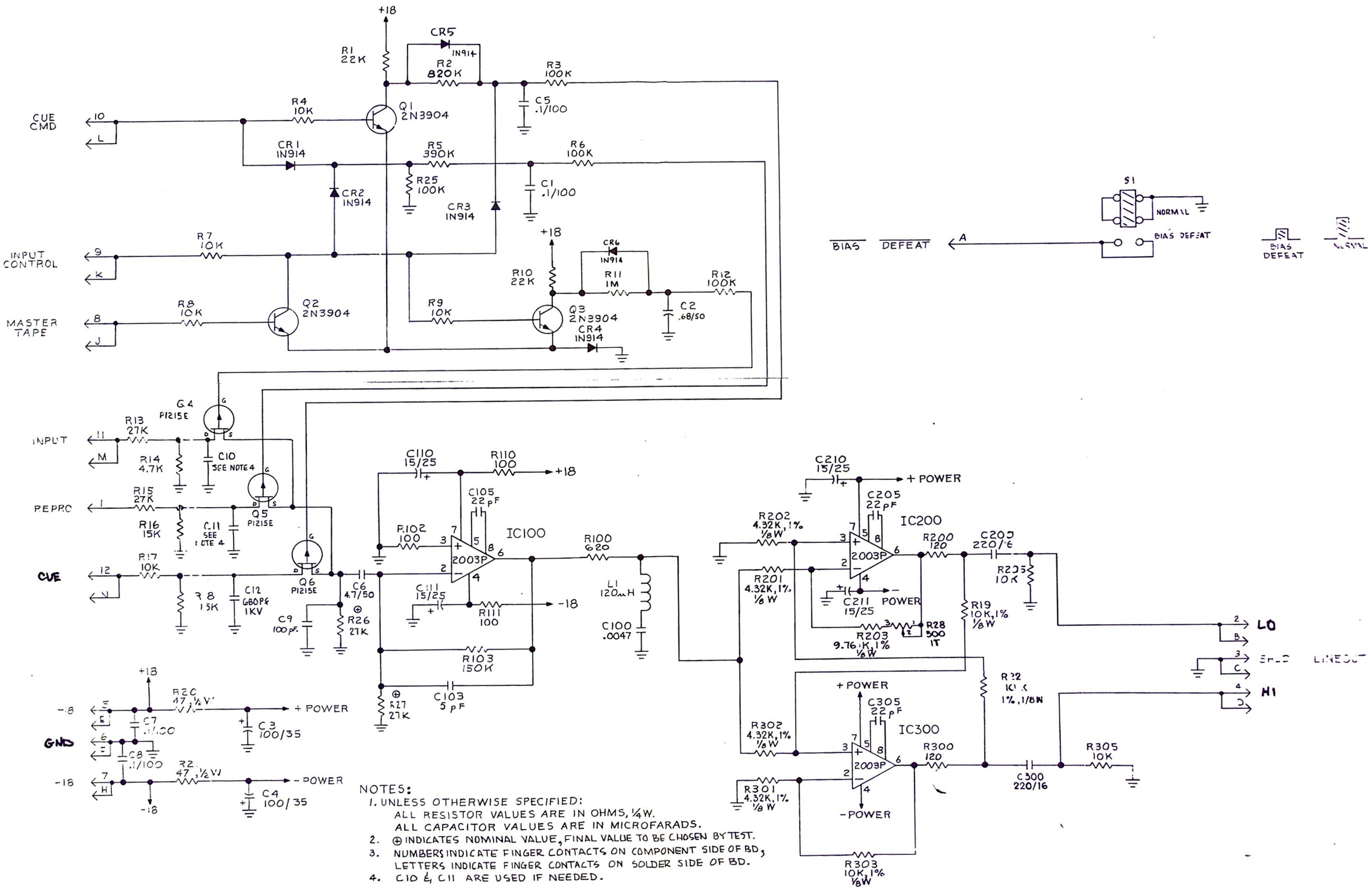

NOTES:

1. UNLESS OTHERWISE SPECIFIED:
   ALL RESISTOR VALUES ARE IN OHMS, 1/4W.
   ALL CAPACITOR VALUES ARE IN MICROFARADS.
2. ⊕ INDICATES NOMINAL VALUE, FINAL VALUE TO BE CHOSEN BY TEST.
3. NUMBERS INDICATE FINGER CONTACTS ON COMPONENT SIDE OF BD, LETTERS INDICATE FINGER CONTACTS ON SOLDER SIDE OF BD.
4. C10 & C11 ARE USED IF NEEDED.

Output Module
SC9000D0147 rev L

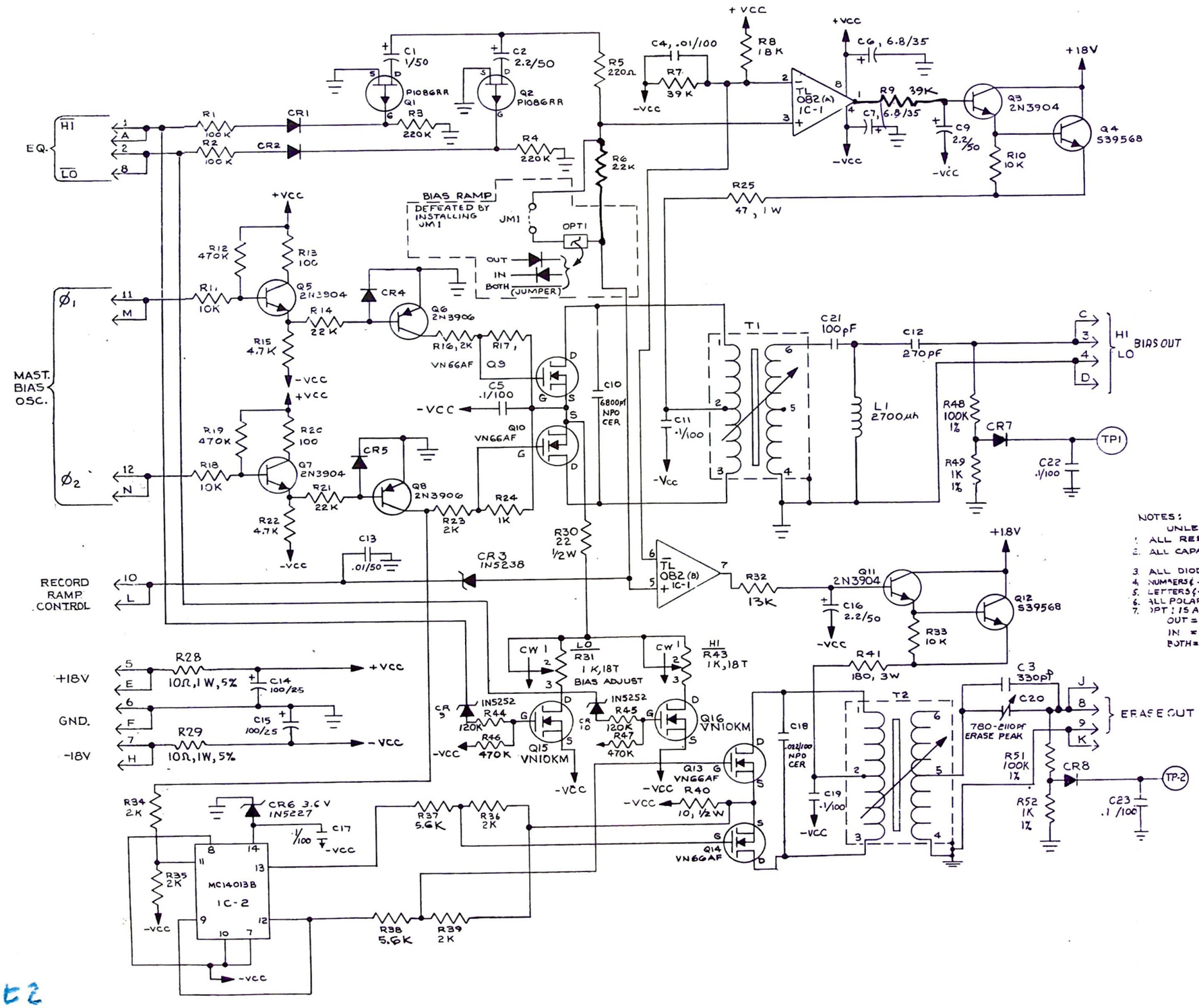

NOTES:
UNLESS OTHERWISE SPECIFIED —
1. ALL RESISTOR VALUES ARE IN OHMS, 1/4W, 5%
2. ALL CAPACITOR VALUES ARE IN — MICROFARADS/VOLTS
3. ALL DIODES ARE IN 914
4. NUMBERS (— INDICATE GOLD FINGERS ON COMP SIDE OF BD
5. LETTERS (— INDICATE GOLD FINGERS ON SOLDER SIDE OF BD
6. ALL POLARIZED CAPACITORS ARE ELECTROLYTIC
7. OPT 1 IS A CUSTOMER OPTION
OUT = RAMP DISABLED ON PUNCH OUT OF RECORD
IN = RAMP DISABLED ON PUNCH IN OF RECORD
BOTH = RAMP DISABLED ON PUNCH IN & OUT OF RECORD

Bias Board
SC9000C0148 rev V

PARTS LIST — RECORD/CUE TRANSFORMER PLUG-ON BOARD

PART NUMBER	DESCRIPTION	QUAN.	DESIGNATOR
PCA9000-0187-00	RE/CUE PLUG-ON JH-24	1	
1.0-KOHM5%-1/4W	CARBON FILM RESISTOR	1	R1
47--KOHM5%-1/4W	CARBON FILM RESISTOR	2	R2, R3
4700PF100V-CPF	POLY FILM CAP S/T KT1805	1	C1
PS-5047-126GG30	GOLD PIN MTG.	5	P1, P2, P4, P6, P8
SP-7000-0703-00	4:1 LOW Z TRANS JH-24	1	T1
SP-7000-2318-00	MODIFIED CHOKE 120MH	1	L1
15S121K	120MH INDUCTOR	1	L1

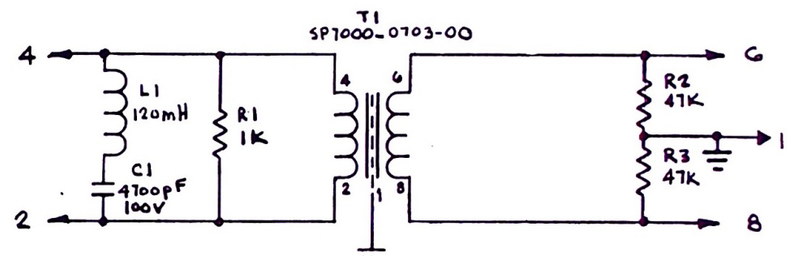

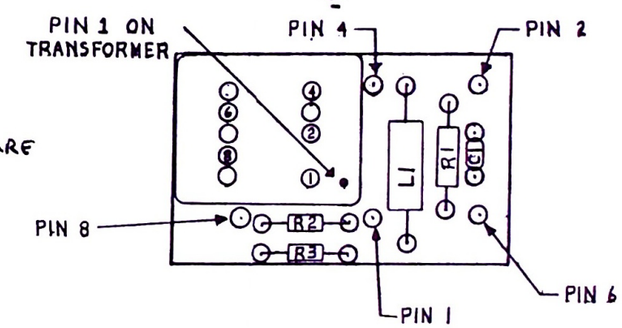

NOTES.

1.- ALL RESISTOR VALUES ARE IN OHMS, 1/4-W, 5%.

Record/Cue Transformer Plug-On Board
SC9000B0187-00 rev B

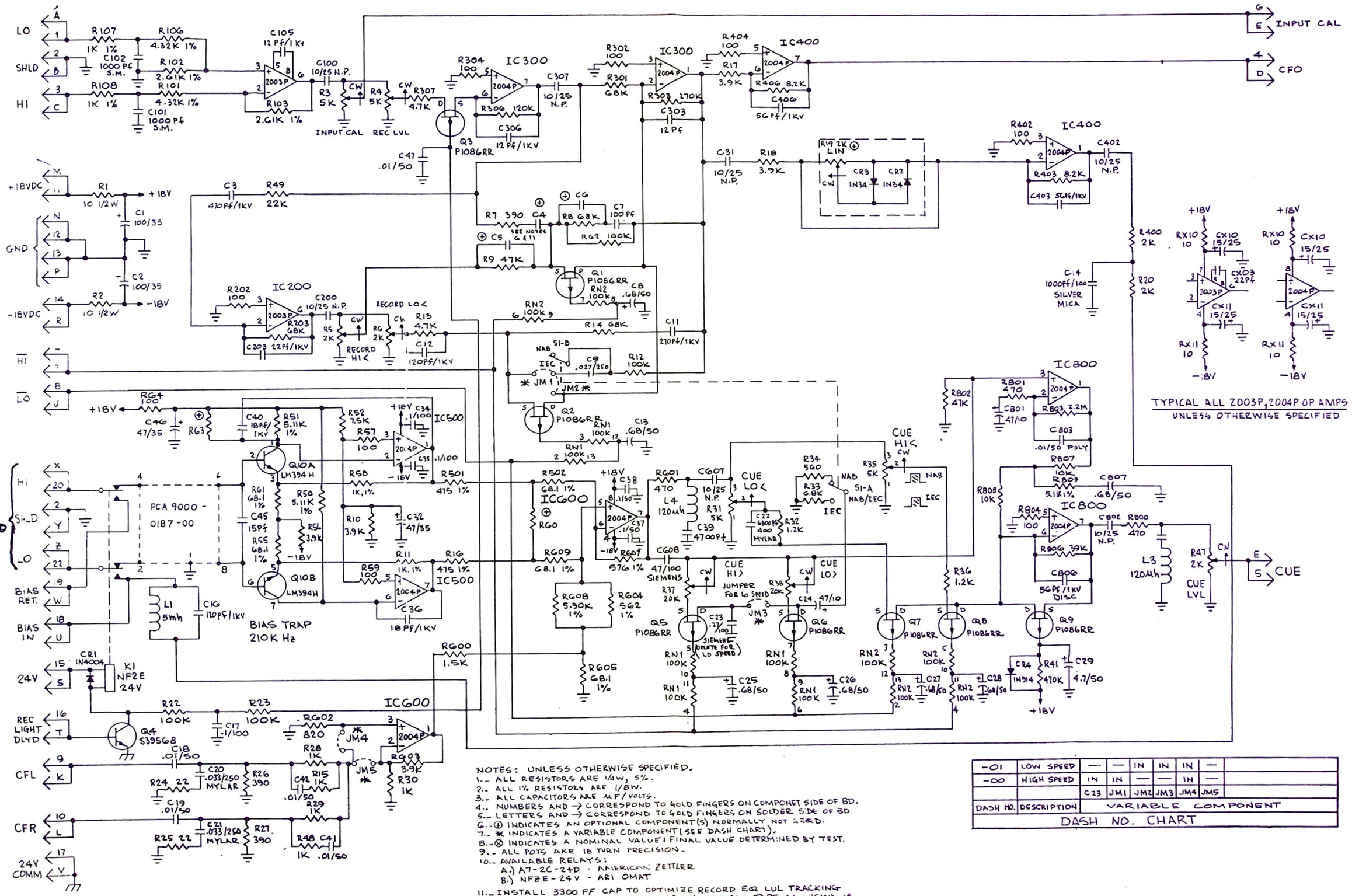

NOTES: UNLESS OTHERWISE SPECIFIED.

1.- ALL RESISTORS ARE 1/4W, 5%.
2.- ALL 1% RESISTORS ARE 1/8W.
3.- ALL CAPACITORS ARE µF/VOLTS.
4.- NUMBERS AND → CORRESPOND TO GOLD FINGERS ON COMPONET SIDE OF BD.
5.- LETTERS AND → CORRESPOND TO GOLD FINGERS ON SOLDER SIDE OF BD.
6.- ⊕ INDICATES AN OPTIONAL COMPONENT(S) NORMALLY NOT REQD.
7.- ✱ INDICATES A VARIABLE COMPONENT (SEE DASH CHART).
8.- ⊗ INDICATES A NOMINAL VALUE; FINAL VALUE DETERMINED BY TEST.
9.- ALL POTS ARE 18 TURN PRECISION.
10.- AVAILABLE RELAYS:
  A.) A7-2C-24D - AMERICAN ZETTLER
  B.) NFZE-24V - ARI OMAT
11.- INSTALL 3300 PF CAP TO OPTIMIZE RECORD EQ LUL TRACKING BETWEEN 15 & 30 IPS WITH M250 & AGFA466 TAPE. AS SHOWN IS OPTIMUM FOR 3M 226 & AMPEX 456 TAPE.

-01	LOW SPEED	—	—	IN	IN	IN	—	
-00	HIGH SPEED	IN	IN	—	—	IN	—	
		C23	JM1	JM2	JM3	JM4	JM5	
DASH NO.	DESCRIPTION	VARIABLE COMPONENT						

DASH NO. CHART

Record/Cue Board
PCX9000-0149 rev AA

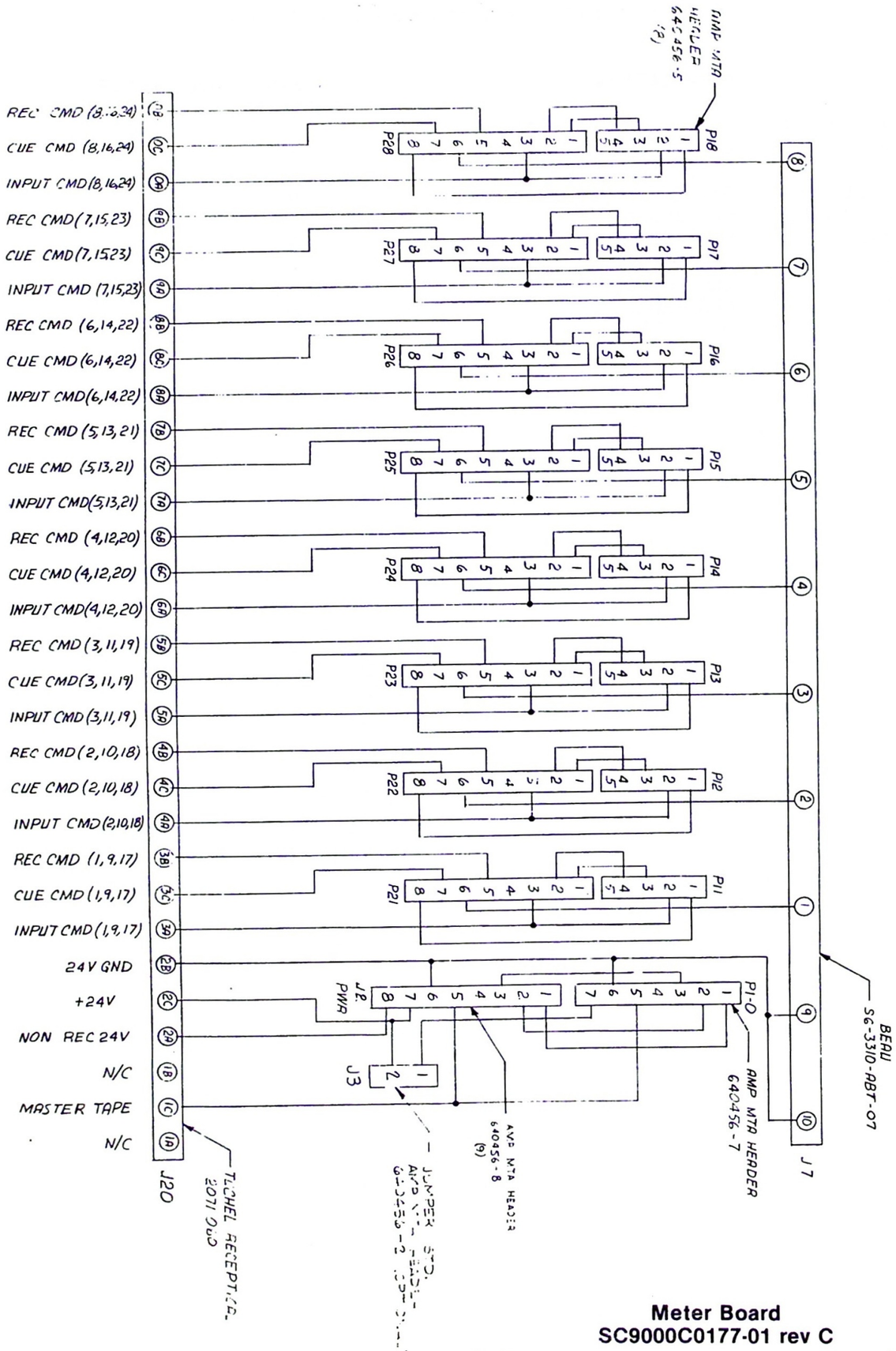

Meter Board
SC9000C0177-01 rev C

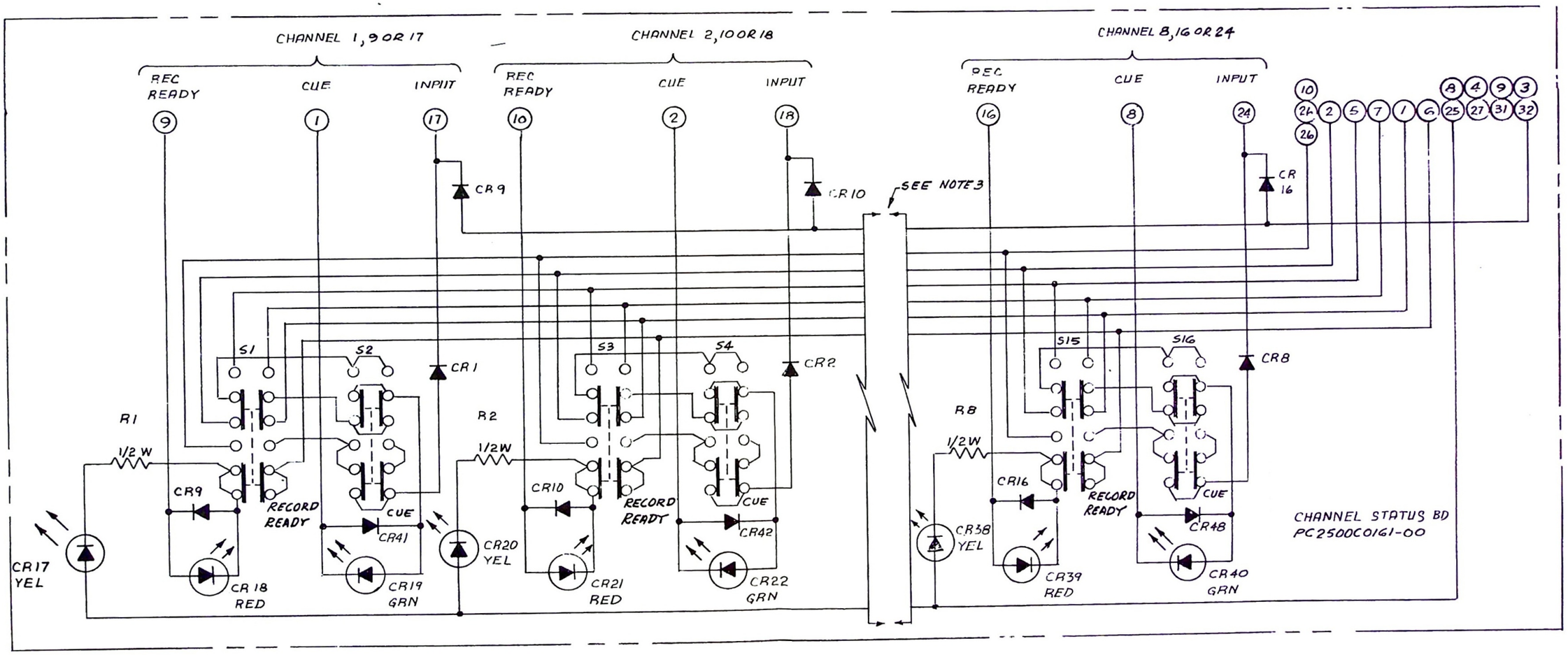

NOTES: UNLESS OTHERWISE SPECIFIED

1. ALL DIODES ARE 1N4004.
2. ALL SWITCHES ARE SHOWN IN THE NON-ENGAGED POSITION.
3. CHANNELS 3-7 ARE IDENTICAL TO CHANNELS 1, 2 & 8; COMPONENT NUMBERING CONTINUES IN SAME SEQUENCE AS IN CHANNELS 1 & 2
4. ○ = PADS ON CHANNEL STATUS BOARD (WHERE EXTERNAL CABLE IS SOLDERED).

Channel Status Board (1 of 2)
SC9000C0161 rev B

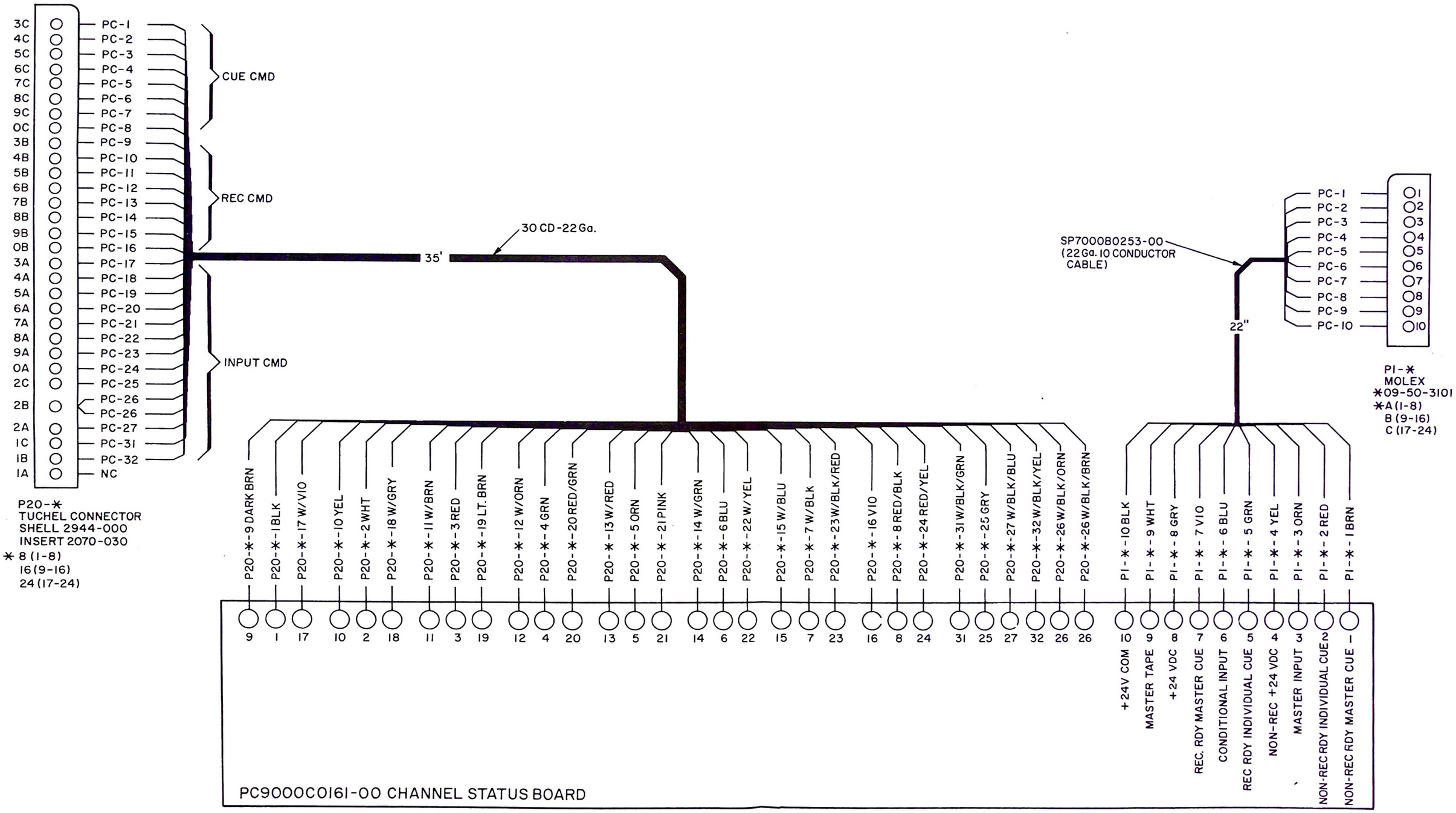

NOTE: FOR USE WITH MTR HSG 2000D0801-34, 2000D0801-35 & 2000D0801-36 ONLY.

Channel Status Board (2 of 2)
SC9000C0161 rev B

JH-24

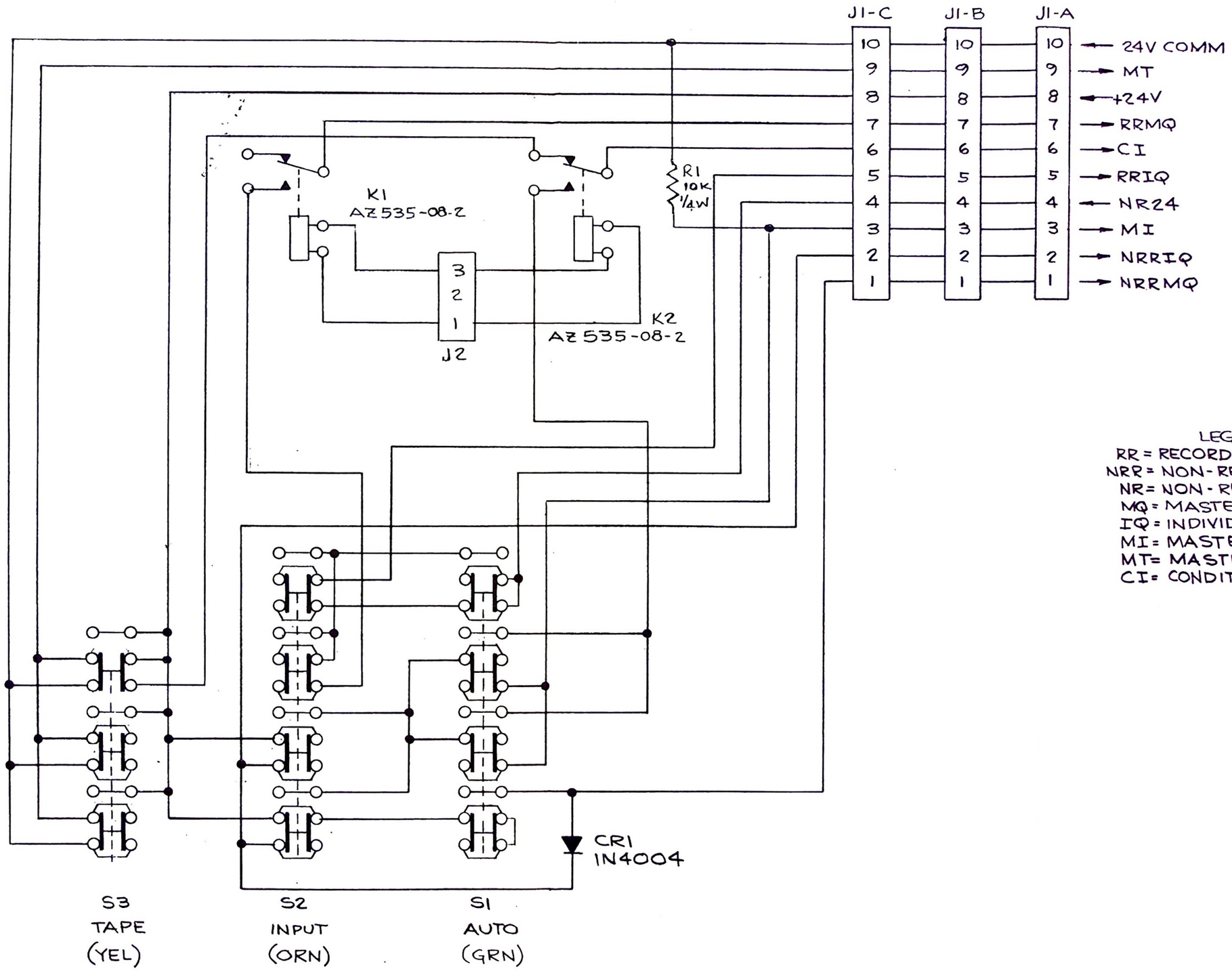

LEGEND
RR = RECORD READY
NRR = NON-RECORD READY
NR = NON-RECORD
MQ = MASTER CUE
IQ = INDIVIDUAL CUE
MI = MASTER INPUT
MT = MASTER TAPE
CI = CONDITIONAL INPUT

NOTES: UNLESS OTHERWISE SPECIFIED
1. ALL SWITCHES ARE SHOWN IN THE NON-ENGAGED POSITION.
2. ARROWS INDICATE DIRECTION OF CONTROL OR POWER FLOW.
3. INTERFACE CONNECTOR CODING IS DERIVED BY COMBINING LEGEND FUNCTIONS.

Master Switch Board
SC2500C0231 rev C

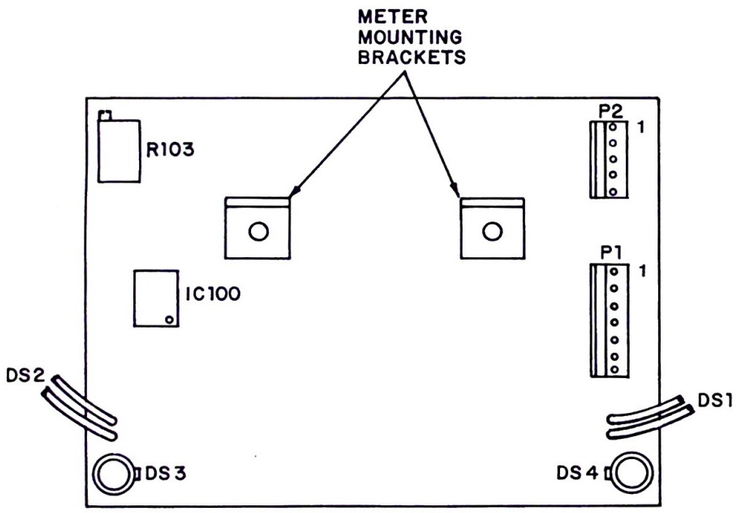

PC9000-0167

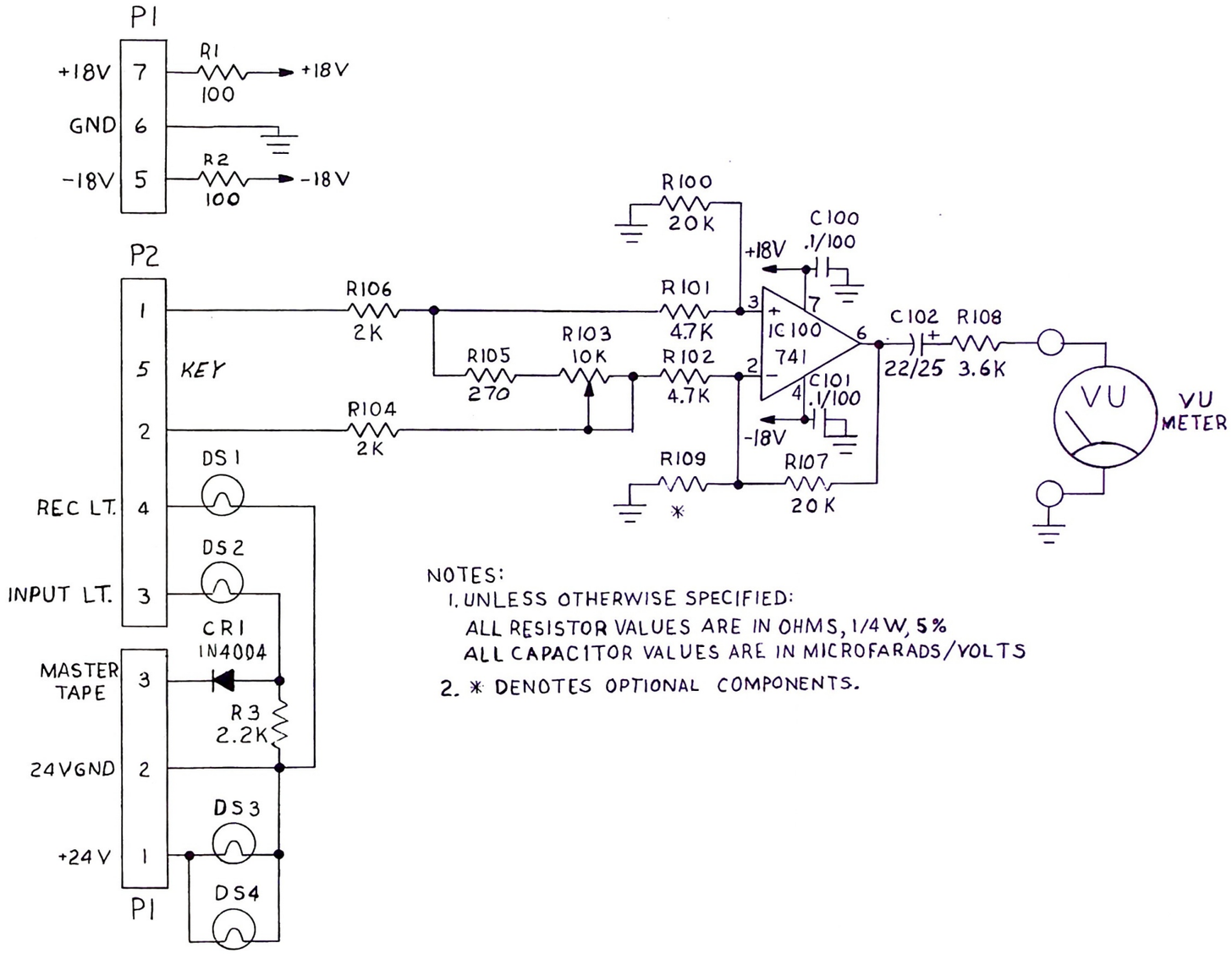

NOTES:

1. UNLESS OTHERWISE SPECIFIED:
   ALL RESISTOR VALUES ARE IN OHMS, 1/4 W, 5%
   ALL CAPACITOR VALUES ARE IN MICROFARADS/VOLTS
2. * DENOTES OPTIONAL COMPONENTS.

Meter Buffer Board
SC9000B0167 rev D

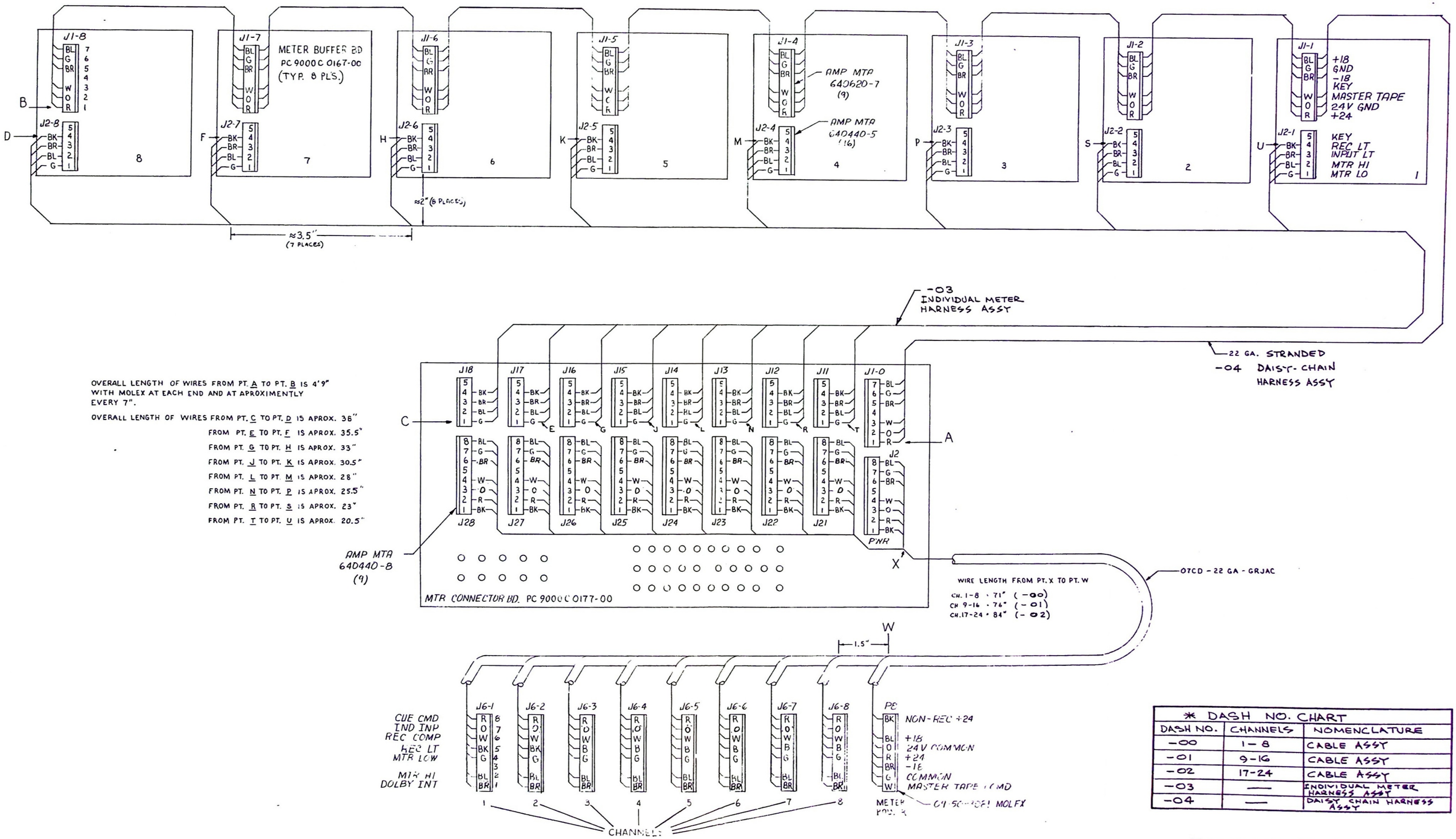

OVERALL LENGTH OF WIRES FROM PT. A TO PT. B IS 4'9" WITH MOLEX AT EACH END AND AT APROXIMENTLY EVERY 7".

OVERALL LENGTH OF WIRES FROM PT. C TO PT. D IS APROX. 36"
FROM PT. E TO PT. F IS APROX. 35.5"
FROM PT. G TO PT. H IS APROX. 33"
FROM PT. J TO PT. K IS APROX. 30.5"
FROM PT. L TO PT. M IS APROX. 28"
FROM PT. N TO PT. P IS APROX. 25.5"
FROM PT. R TO PT. S IS APROX. 23"
FROM PT. T TO PT. U IS APROX. 20.5"

* DASH NO. CHART		
DASH NO.	CHANNELS	NOMENCLATURE
-00	1-8	CABLE ASSY
-01	9-16	CABLE ASSY
-02	17-24	CABLE ASSY
-03	—	INDIVIDUAL METER HARNESS ASSY
-04	—	DAISY CHAIN HARNESS ASSY

Meter Housing Wire Harness
WD9000D0183 rev E

JH-24

Direction *

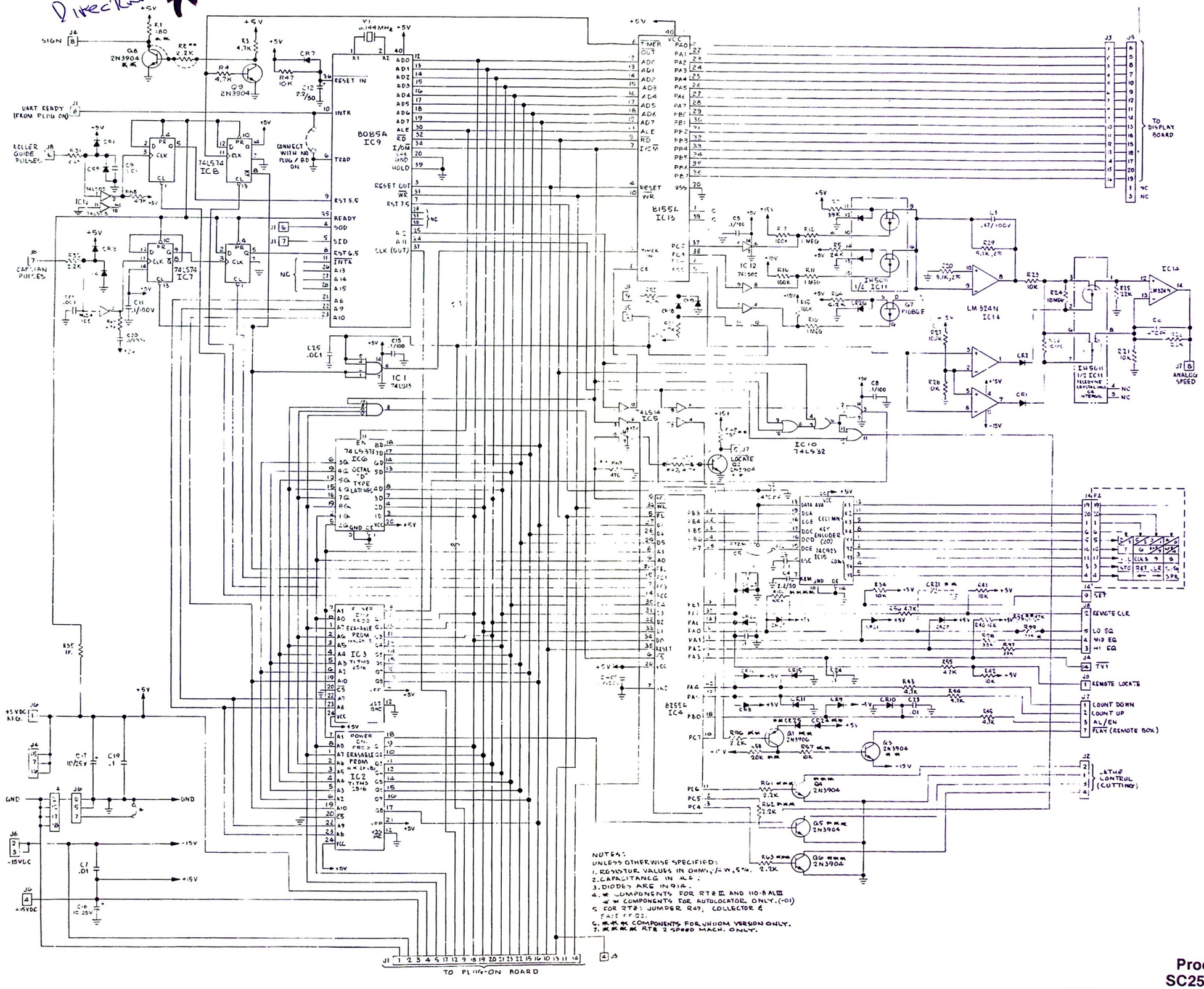

Processor Board
SC2500E0639 rev H

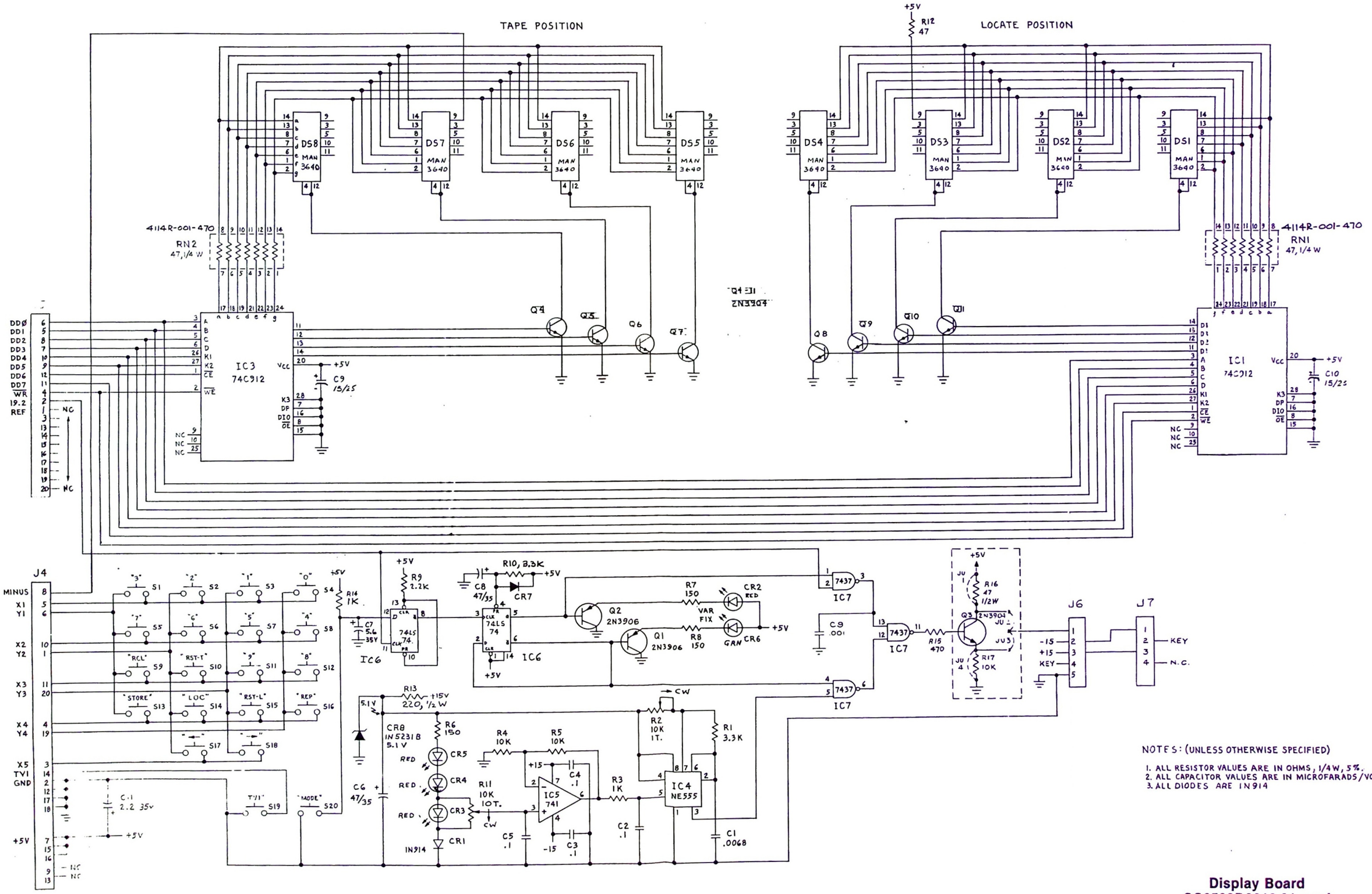

NOTES: (UNLESS OTHERWISE SPECIFIED)

1. ALL RESISTOR VALUES ARE IN OHMS, 1/4W, 5%.
2. ALL CAPACITOR VALUES ARE IN MICROFARADS/VOLTS.
3. ALL DIODES ARE 1N914

Display Board
SC2500D0610-01 rev I

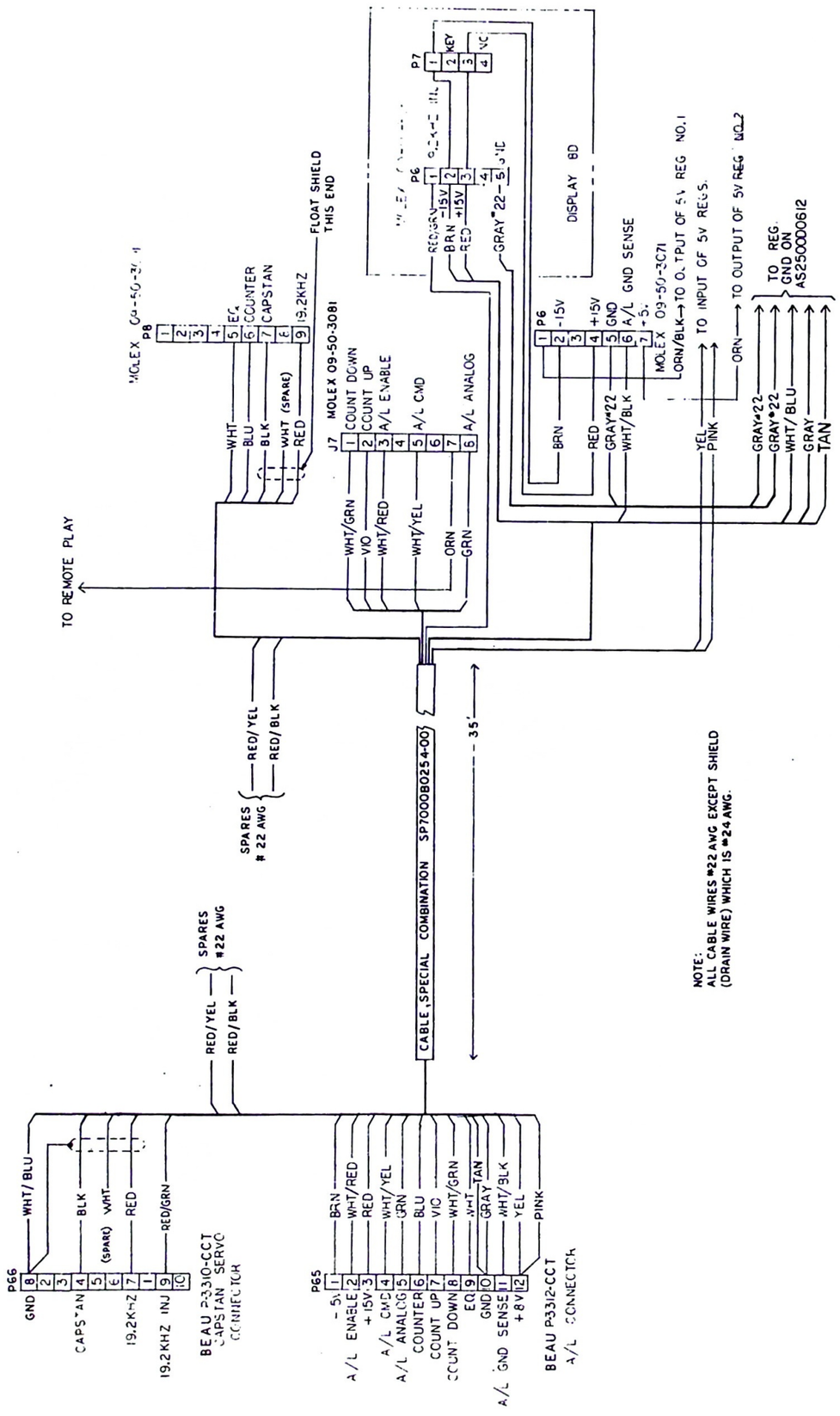

Remote Cable
WD2500D0631 rev E

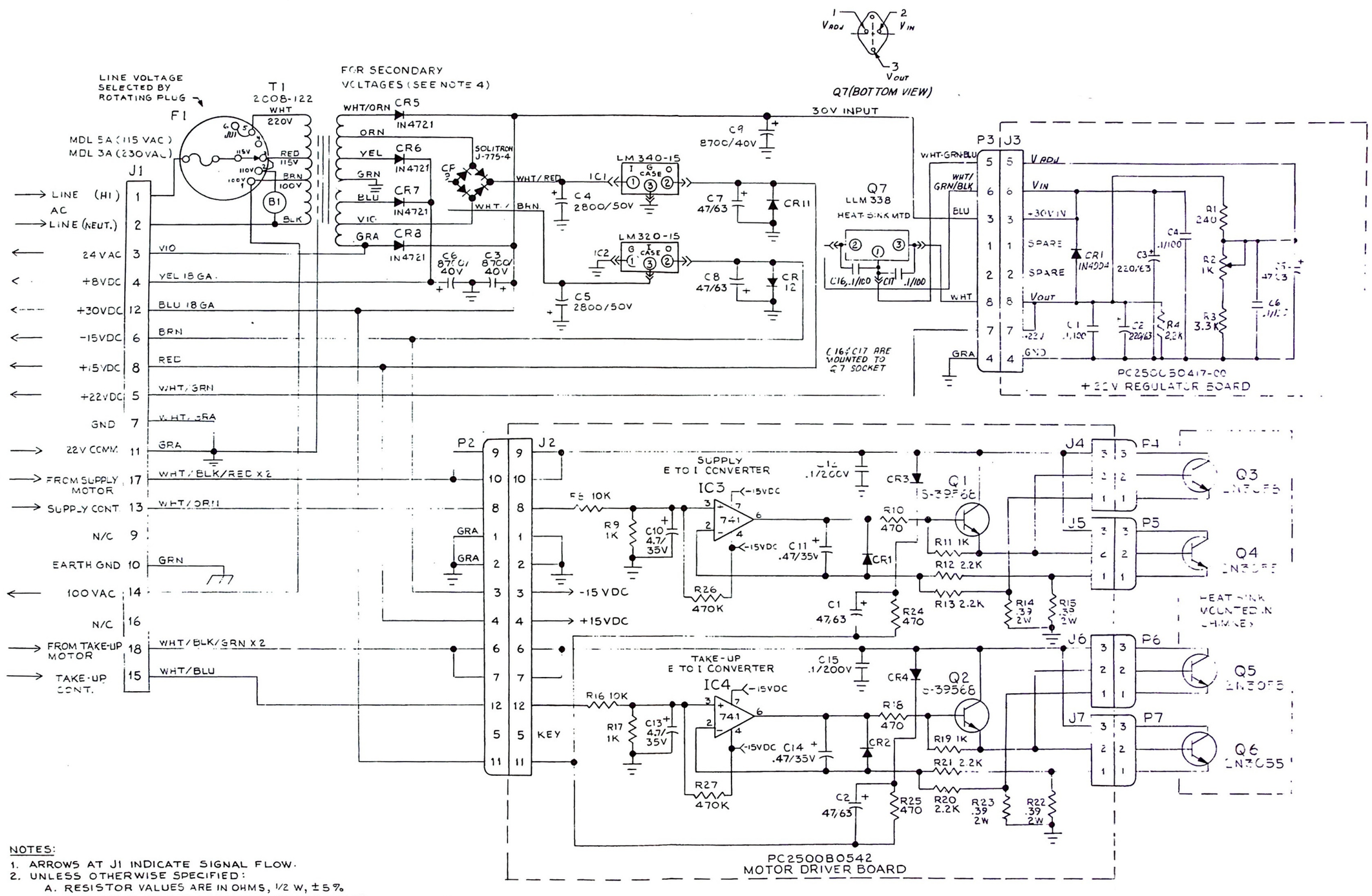

NOTES:

1. ARROWS AT J1 INDICATE SIGNAL FLOW.
2. UNLESS OTHERWISE SPECIFIED:
   A. RESISTOR VALUES ARE IN OHMS, 1/2 W, ±5%
   B. CAPACITOR VALUES ARE MICROFARADS/VOLTS
   C. DIODES ARE IN4004.
   D. WIRE GAUGE IS 22GA.
3. ALL ⏚ SYMBOLS ARE CARRIED AS INDIVIDUAL WIRES TO A COMMON TIE POINT.
4. 48 VAC = WHT/ORN & GRA LEADS.
   32 VAC = ORN & VIO. LEADS.
   18 VAC = YEL & BLU LEADS.

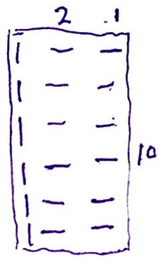

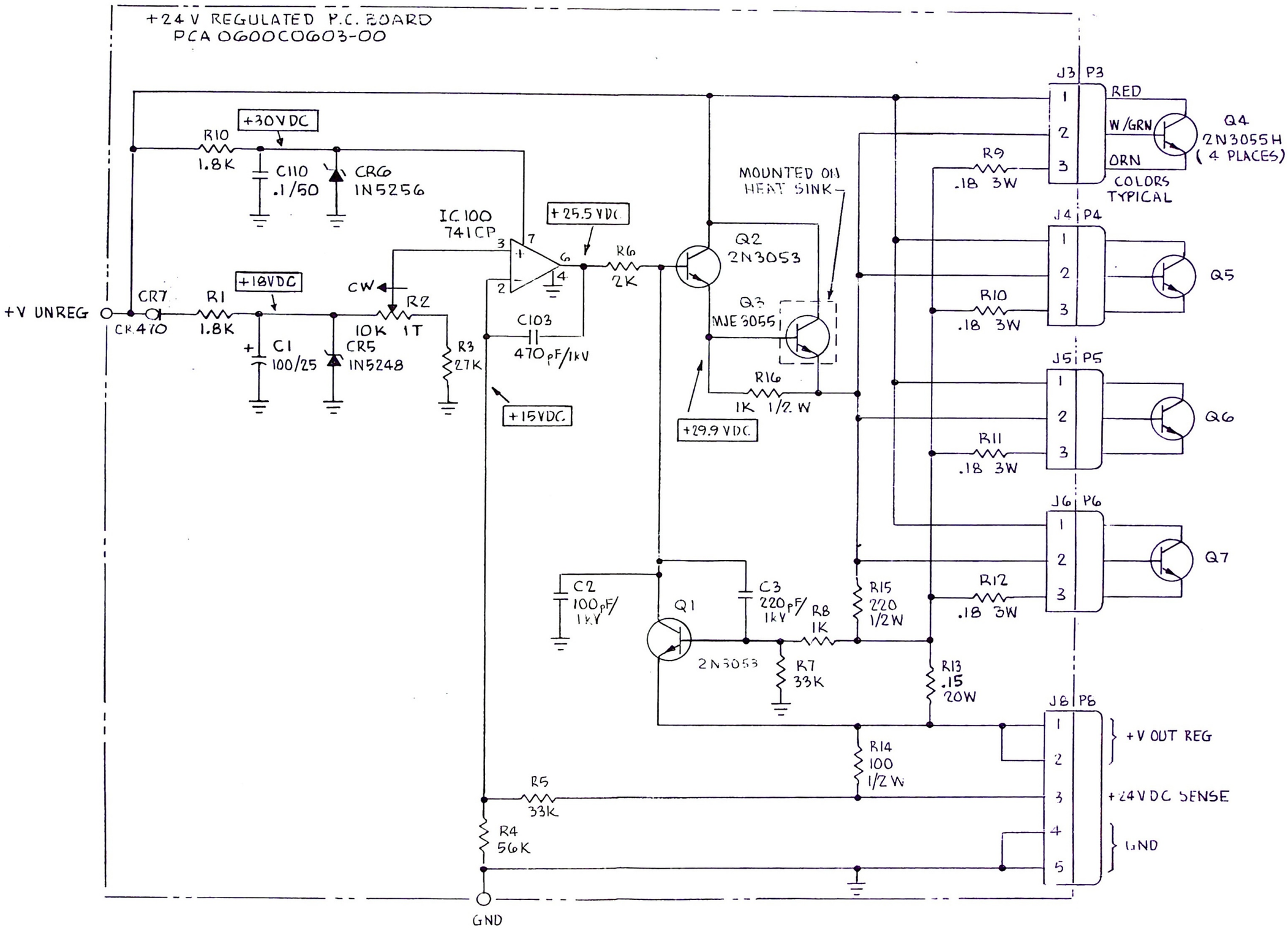

NOTES: UNLESS OTHERWISE SPECIFIED.
1. ALL RESISTOR VALUES ARE IN OHMS, 1/4W, 5%.
2. ALL CAPACITOR VALUES ARE IN MICROFARADS/VOLTS

24V Regulator
SC0600C0622

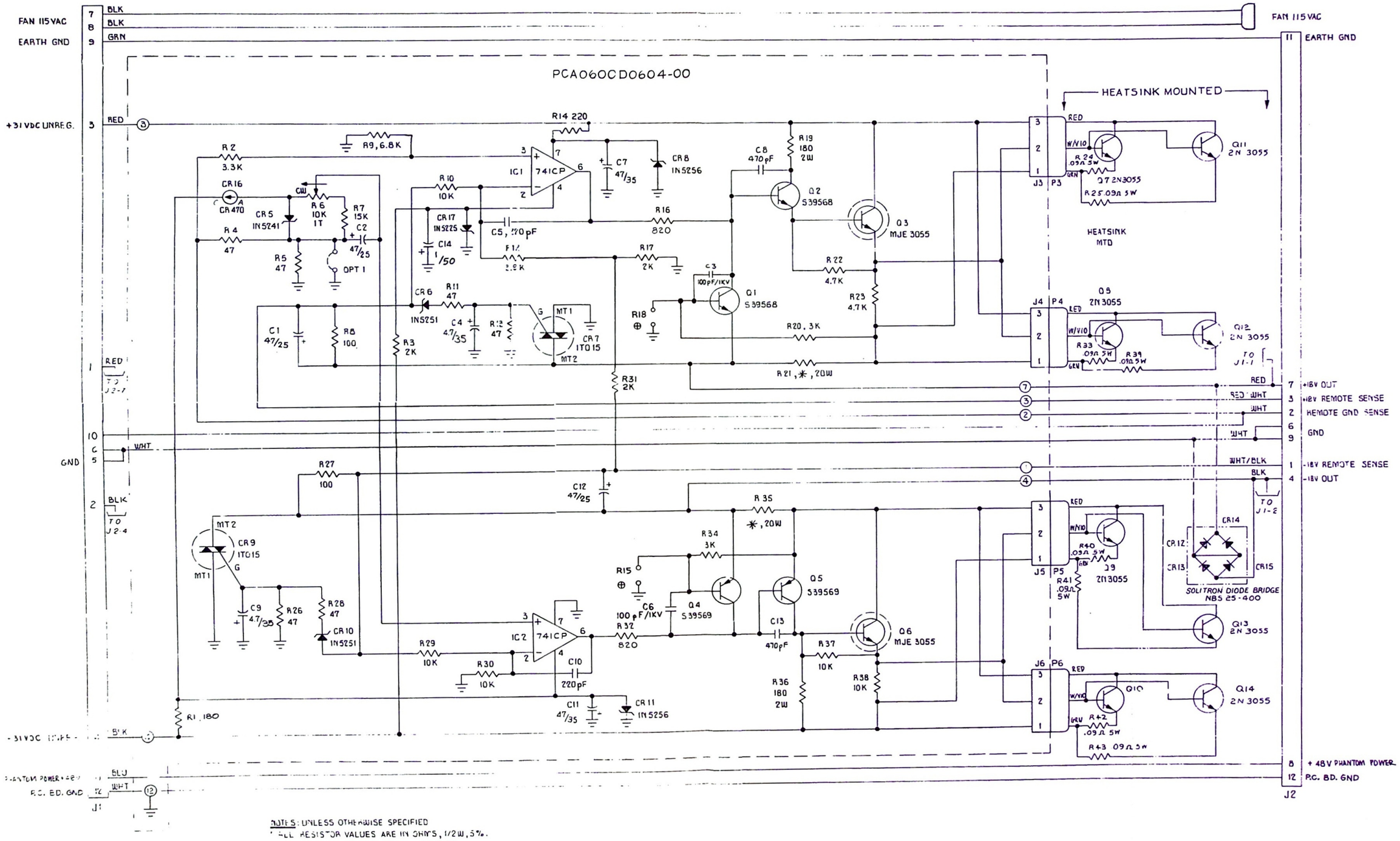

NOTES: UNLESS OTHERWISE SPECIFIED
1. ALL RESISTOR VALUES ARE IN OHMS, 1/2W, 5%.
2. ALL CAPACITOR VALUES ARE IN µF/VOLTS.
3. OPT 1: USE JUMPER TO DEFEAT GROUND SENSE.
4. Q7-Q14 AND ASSOCIATED EMITTER RESISTORS ARE HEATSINK MOUNTED
5. ⊕ INDICATES, USED ONLY IF FOLDBACK CURRENT LIMIT IS DESIRED

DASH #	PRODUCT	R21	R35
00	JH-600	.1	.1
02	JH-24	.08	.08

±18V Regulator
SC0600D0604 rev N

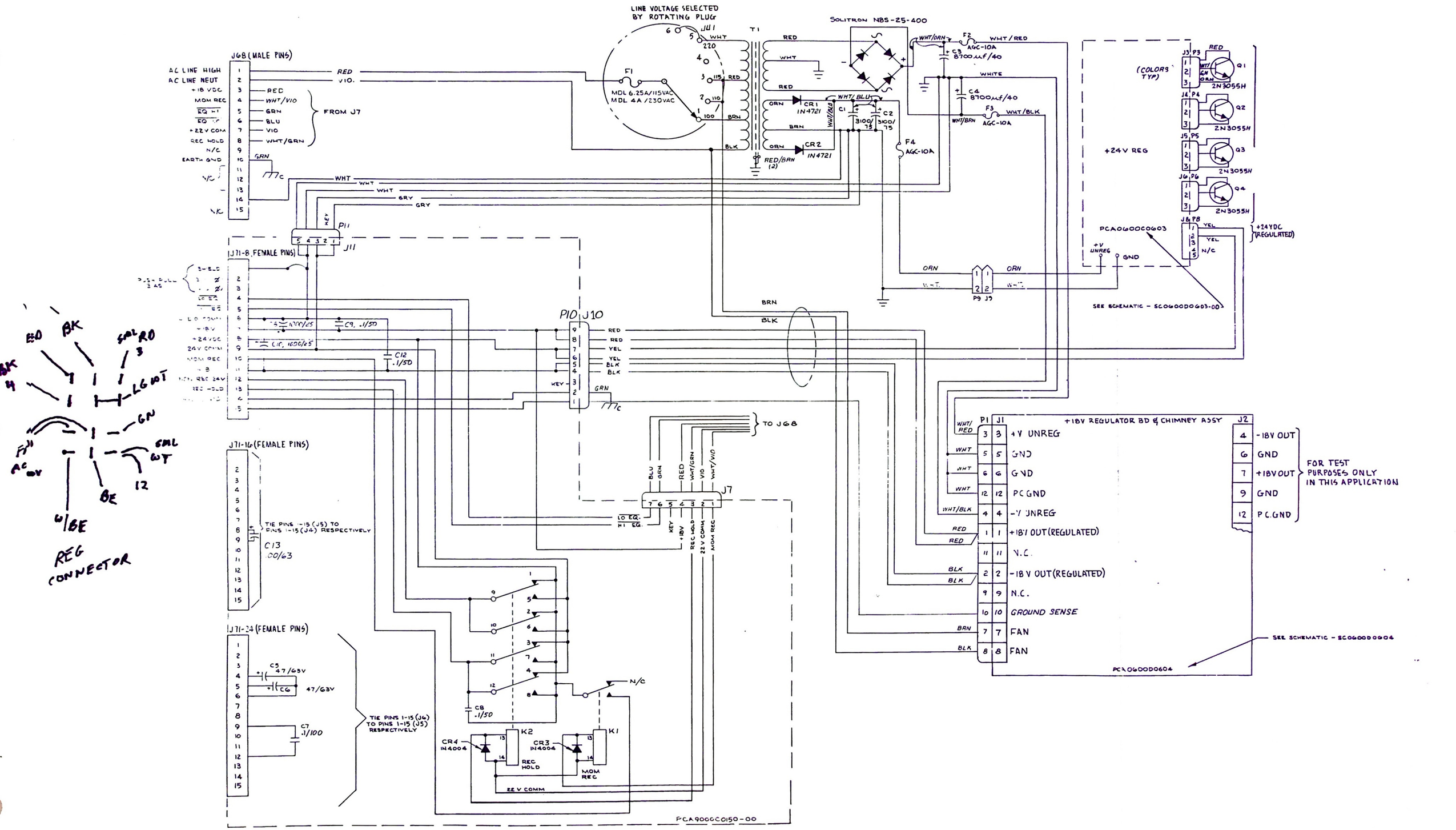

JH-24D Audio Power Supply
SC9000D0151 rev K